Schlüter Systems®

PROFILE OF INNOVATION

Schlüter®-DILEX-BWA

Connection profile
for flexible connections

4.9
Product data sheet

Application and function

Schlüter-DILEX-BWA is a pre-fabricated plastic movement joint profile for installation in tiled coverings. It is used to create flexible connection joints with fixed structural components.
The perforated anchoring leg, made of PVC-U (rigid PVC), is secured in the tile adhesive beneath the tiles.
The second anchoring leg has a dove-tailed chamber that can be filled with tile adhesive, epoxy resin, silicone or similar compounds to bond the profile to the existing structure.
The 5 mm wide movement zone, made of PVC-P (soft PVC), absorbs occurring movements.
The lower soft zone is slit to maximise the absorption of tensile stresses.
The DILEX-BWA profile prevents sound bridges, thereby reducing sound transmission.

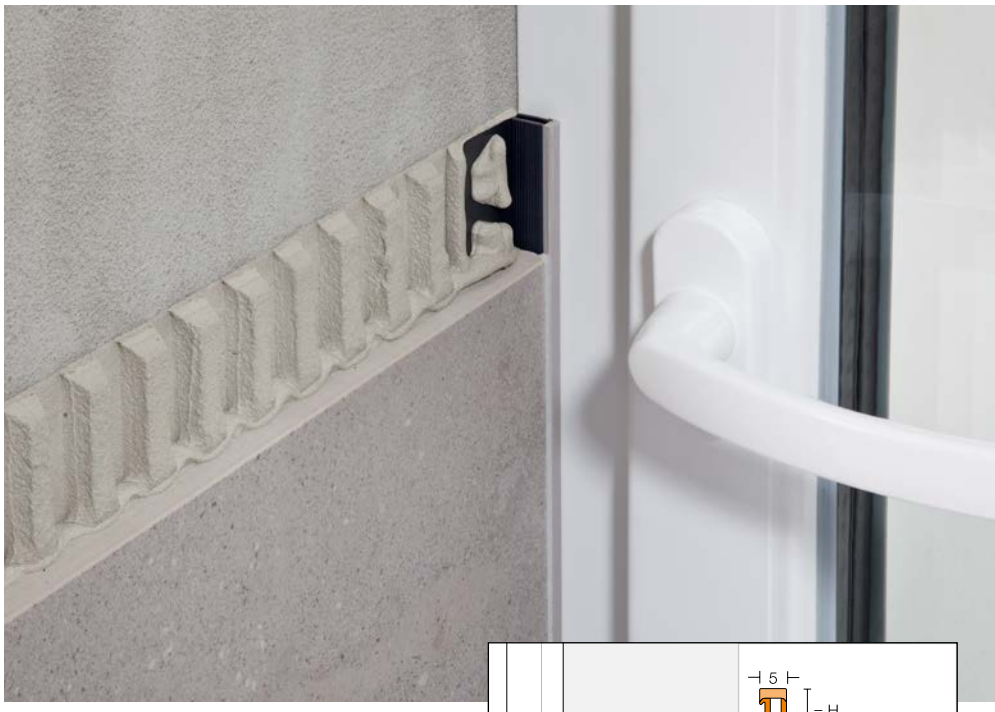

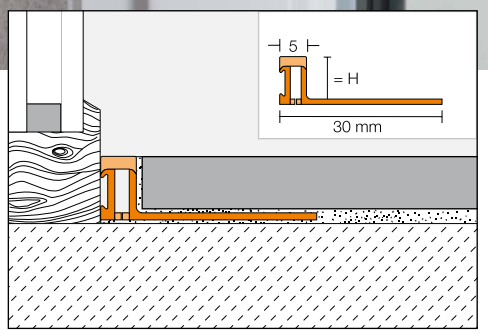

Material

The DILEX-BWA profile consists of a perforated anchoring leg made of PVC-U (rigid PVC) connected by a PVC-P (soft PVC) top and bottom section to a dove-tailed channel, also made of PVC-U (rigid PVC). The side section features a dove-tailed channel.

Material properties and areas of application

The profile is resistant to the chemical stresses commonly encountered with tiled coverings, and it is resistant to fungi and bacteria.

The movement zone of the profile is UV-resistant and free from phthalate-based plasticisers.
Check on a case-by-case basis whether the intended material type is suitable for the expected chemical, mechanical or other stresses.

The DILEX-BWA profile is used in tile installations as a flexible connection joint to fixed structural elements. Applications include window or door frames, thresholds, cupboard-wall connections, floor coverings against existing wall or dado coverings, etc.

Installation

1. Select the DILEX-BWA profile according to the tile thickness.
2. Apply the tile adhesive at the perimeter where the profile is to be installed, using a notched trowel.
3. If required, fill the dove-tailed channel of the external finishing leg with epoxy resin, silicone, or similar to adhere the profile to the existing structure.
4. Press the DILEX-BWA profile with the trapezoid-perforated anchoring leg into the adhesive bed and press it firmly against the structural element.
5. Next, apply a full-surface coat of tile adhesive to the trapezoid-perforated anchoring leg.
6. Press the adjoining tiles firmly into place and ensure they are flush with the top edge of the profile.
7. Leave a gap of approx. 2 mm between the profiles.
8. Completely fill the space from the tiles to the profile with grout.

Notes

The DILEX-BWA profile is designed to be resistant to fungi and bacteria and requires no special care or maintenance. It is simply cleaned as part of the routine cleaning of the tiled covering. We recommend using standard household cleaning products for this.



Application area based on local traffic volume

Persons

Shopping carts
Total weight max. 0.4 t

Cars
Total weight max. 3.5 t

Movement absorption of Schlüter®-DILEX-BWA

DILEX-BWA	1.5 mm

Product overview

Schlüter®-DILEX-BWA

Supplied length: 2.50 m

Colours	G	PG	BW	HB	GS	C	SG	DA	FG
H = 4.5 mm	•	•	•	•	•	•	•	•	•
H = 6.5 mm	•	•	•	•	•	•	•	•	•
H = 5 mm	•	•	•	•	•	•	•	•	•
H = 10 mm	•	•	•	•	•	•	•	•	•
H = 12.5 mm	•	•	•	•	•	•	•	•	•

Movement zone colours:
G = Grey
PG = Pastel grey
BW = Brilliant white
HB = Light beige
GS = Graphite black
C = Cream
SG = Stone grey
DA = Dark anthracite
FG = Joint grey

Schlüter-Systems KG Schmölestraße 7 | D-58640 Iserlohn
+49 2371 971-0 +49 2371 971-1111 info@schlueter.de schlueter-systems.com

Schlüter-Systems Ltd Units 3-6 Bardon 22 Industrial Estate | Bardon Hill | Coalville | Leicestershire | LE67 1TE
+44 (0) 1530 813396 sales@schluter.co.uk schluter.co.uk

Item No. 550 494 – Edition 10/26 – This edition will become invalid upon publication of a new edition – please see the website for the latest version.